PYLE

PyleUSA.com

VISIT US ONLINE:

*Have a question?*
*Need service or repair?*
*Want to leave a comment?*

PyleUSA.com/ContactUs

PYLE

PYLE

PyleUSA.com

***PDWM1950***

***PDWM1958B***

***PDWM2850***

***PDWM2880B***

***PDWM1980***

***PDWM1988B***

***PDWM2950***

***PDWM2958B***

# Compact UHF Wireless Microphone System

## USB Powered Desktop Mic Receiver System with Adjustable Volume Control

# USER MANUAL

- To set up the system and to avoid interference, each unit may have many presented channels.
- When using numbers of receiversltransmitters together, each unit should use different channels.

**Tips**

1. Transmitter and antenna should keep in a barrier-free linear relative position.
2. Do not place receiver close to metal surface object or digital equipment.
3. Try to keep receiver 1.5m above the floor and 1m away from the wall.

## *Contents*


**System Component** ---- 1

**Receiver** ---- 2-3

**Body Pack Transmitter** ---- 4-6

**Body Pack Transmitter Connection** ---- 7

**Charging the Microphone** ---- 8

**Configuration of Multiple Systems** ---- 8

**Troubleshooting** ---- 9

**Specification** ---- 11




## System Component

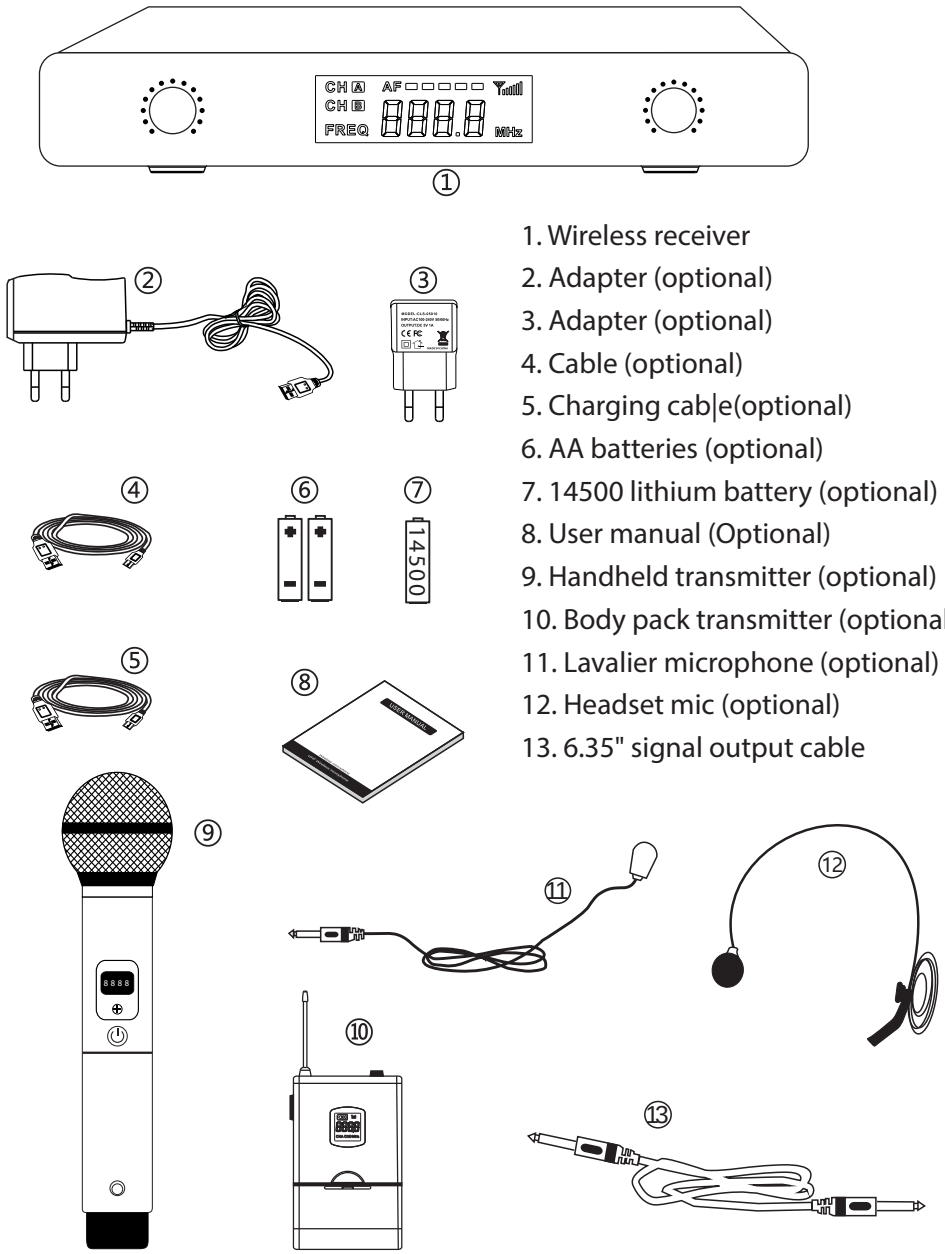


1. Wireless receiver
2. Adapter (optional)
3. Adapter (optional)
4. Cable (optional)
5. Charging cab|e(optional)
6. AA batteries (optional)
7. 14500 lithium battery (optional)
8. User manual (Optional)
9. Handheld transmitter (optional)
10. Body pack transmitter (optional)
11. Lavalier microphone (optional)
12. Headset mic (optional)
13. 6.35" signal output cable

The contents above are for the whole system, the actual component may differ

## Receiver

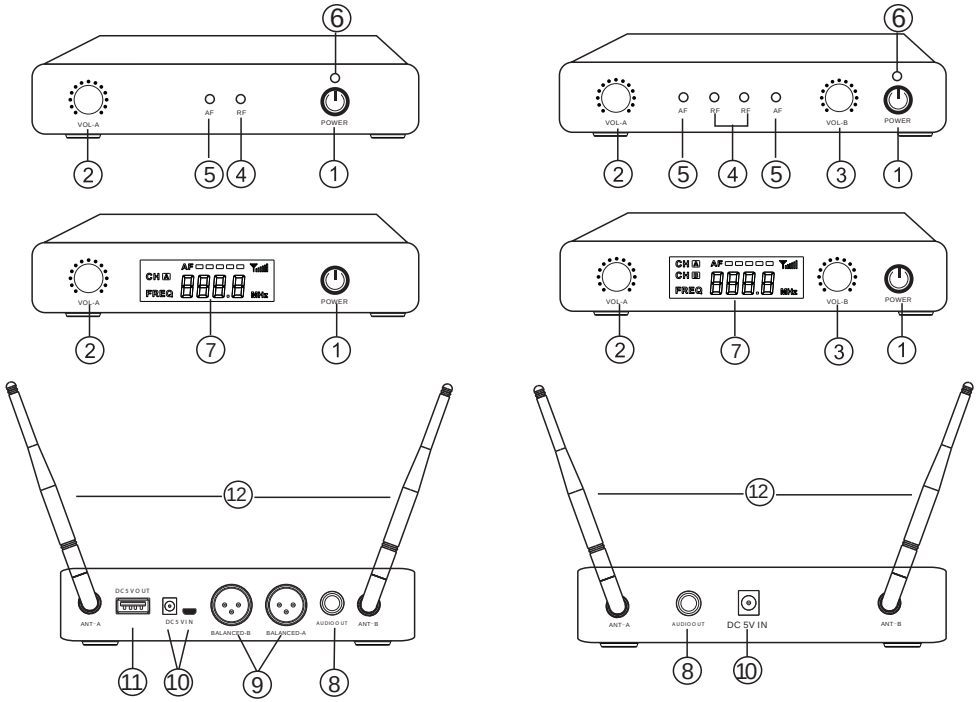


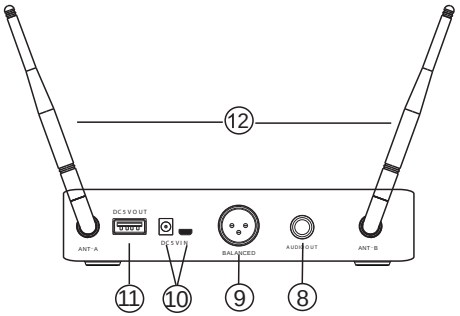


1. Power Switch
2. VOL. A
3. VOL. B
4. RF Signal Lamp
5. AF Signal Lamp
6. Power Signal Lamp
7. LCD Display
8. 1/4 Audio Output Socket
9. XLR Audio Output Socket
10. Power Input Socket
11. Charging Socket
12. ANT-A

The images above are indicative only, the actual product may differ

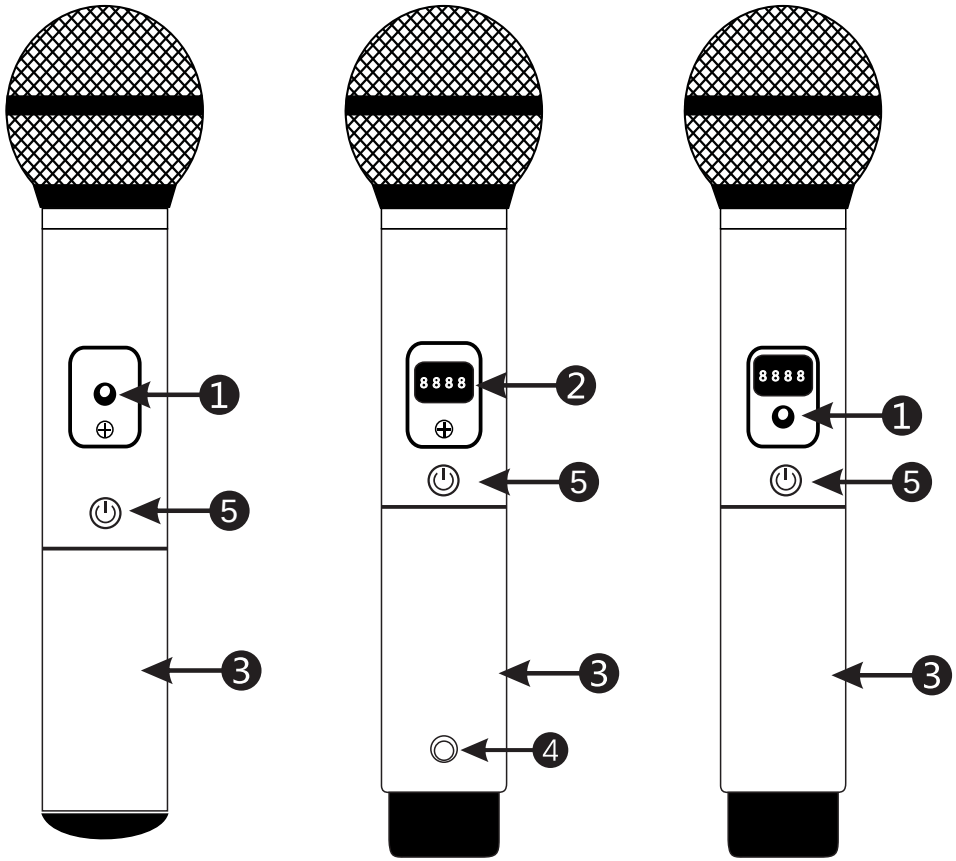


1. Power signal lamp
2. LED display
3. Battery Cover
4. Frequency-change button
5. Power switch

## Body Pack Transmitter (Only apply to some models)

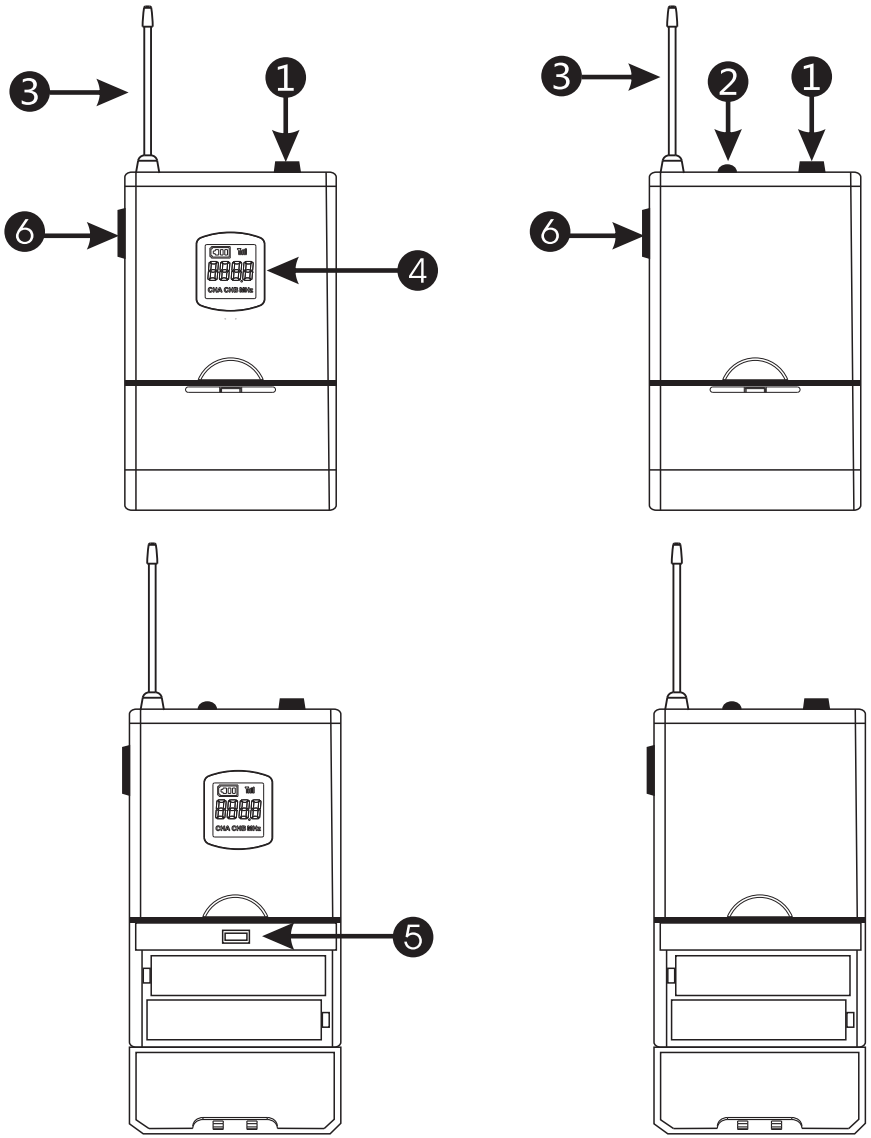


**Functions**

1. Clip microphone socket
2. LED light
3. Antenna
4. LED display
5. Frequency-change button
6. Power switch

## Matching Receiver and Transmitter (Only apply to some models)

1. Make sure the receiver is powered **OFF**.
2. On transmitter side, press and hold the frequency- change button, then press and hold the power button till the display is flashing.
3. Turn **ON** the receiver and then you will see the RF light is flashing.
4. **Attention:** For the receiver that has LED display, turn **ON** the receiver and wait for 3-5 seconds
5. Get back to the transmitter side and re-press the frequency-change button.
6. Matching is successful if the RF light is **ON** or the LED display shows frequency, otherwise, re-do step 1 to step 5.

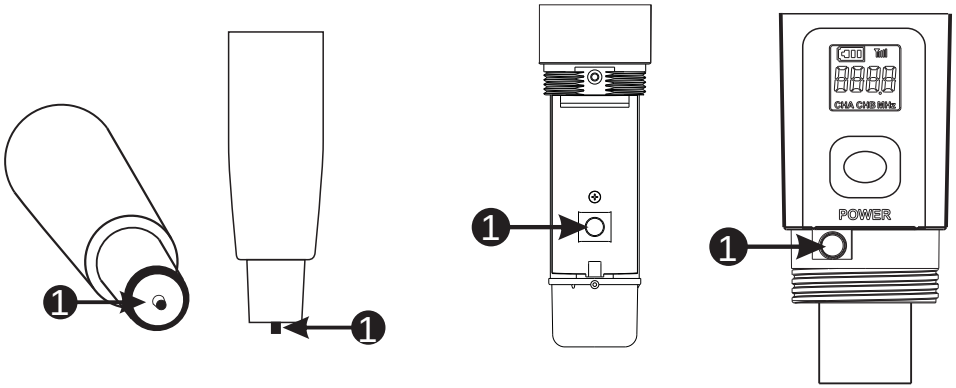


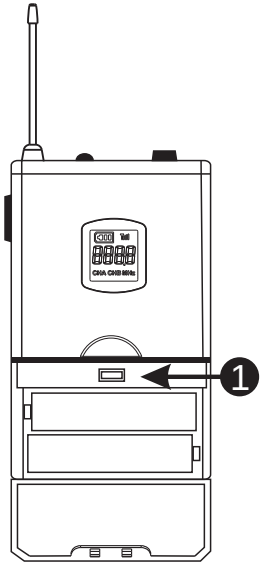


1 Frequency-change button

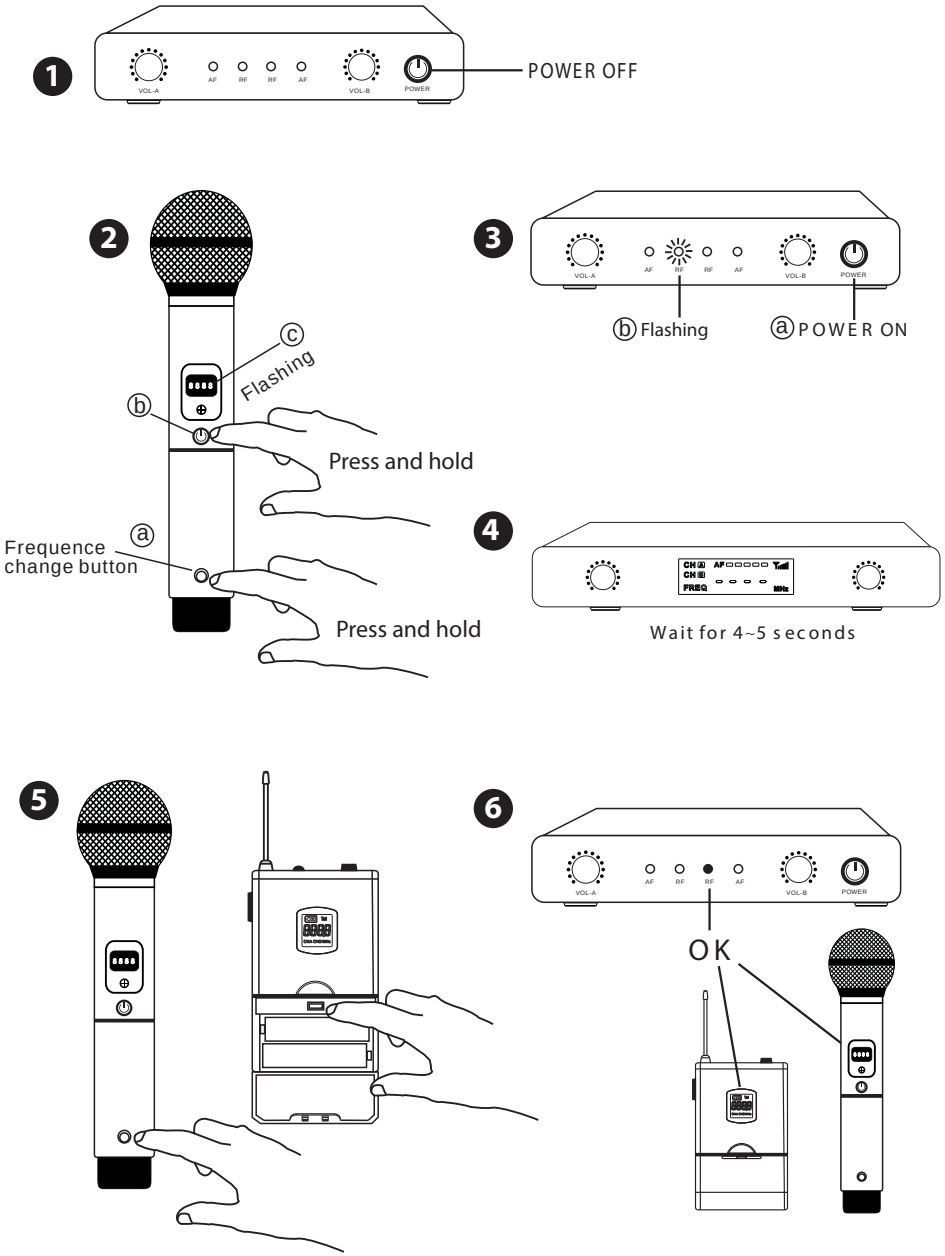


## BODYPACK TRANSMITTER CONNECTION

**1. Lavalier Microphone Connection:**

Connect the connector of supplied lavalier microphone to the connecting jack of transmitter (Shown as below). Set the transmitter work state in wireless lavalier system.

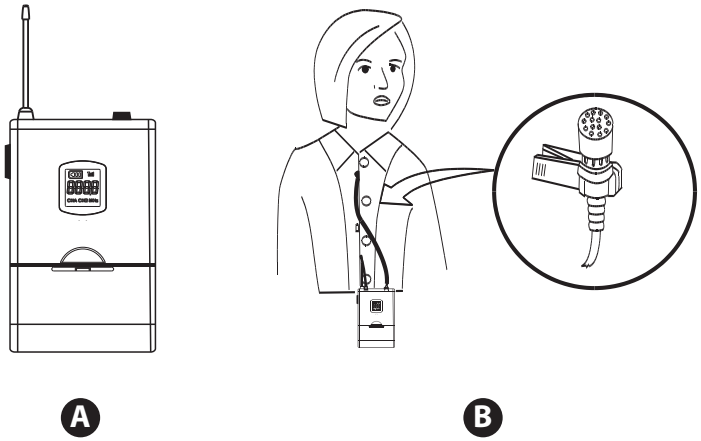


**2. Headset Microphone Connection:**

Connect the connectorof supplied headset microphone to the connecting jack of transmitter (Shown as below). Set the transmitter work state in wireless headset system.

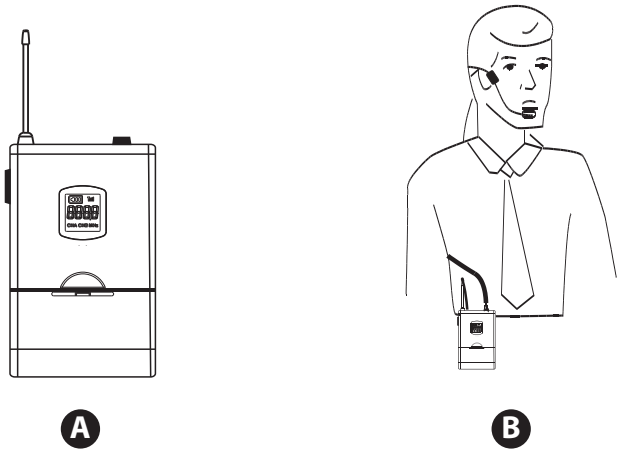

## Charging the microphone (Only apply to some models)

**CAUTION: For charging microphone, MUST NOT use AA battery to power the microphone. MUST use 14500 lithium battery.**

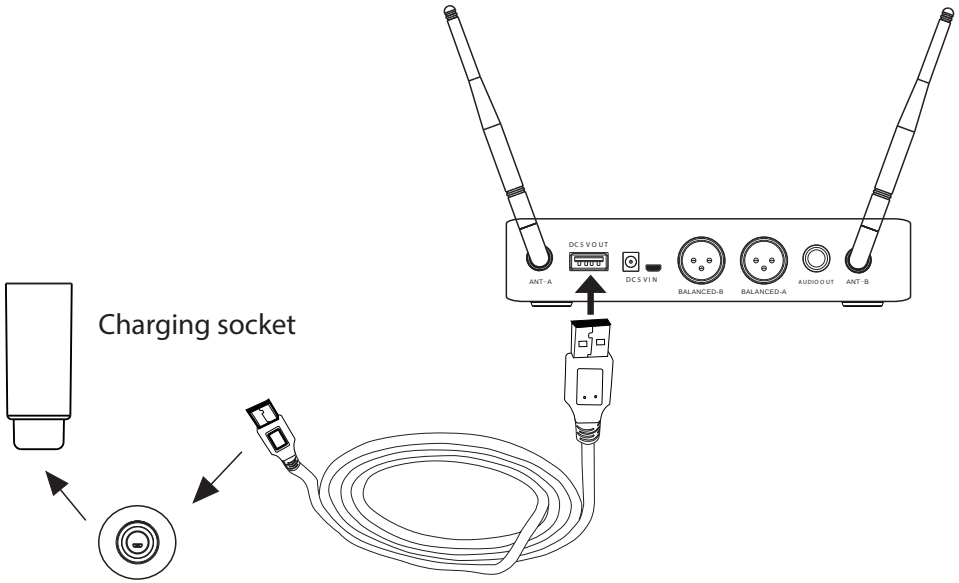


## Configuration of Multiple Systems

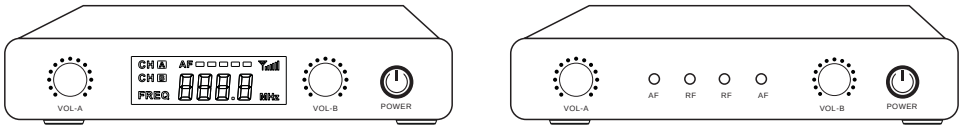


1. Transmitters match corresponding receivers to prevent frequency interference
   ***(See "Matching receiver and transmitter" for reference)***

2. Using different frequencies among transmitters
   ***(The difference should be 3-4MHz for each transmitters)***

## TROUBLESHOOTING

| Problem | Status | Solution |
|---|---|---|
| **No sound or sound is weak** | Transmitter display or light is off | 1. Turn on transmitter<br>2. Make sure battery is installed right<br>3. Replace batteries |
| | Receiver display or light is off | Make sure adapter is pluged into receiver DC socket, and the adapter is power supplied |
| | Receiver display or light indicate RF signal | 1. Turn up receiver volume<br>2. Check the cable connection of receiver |
| | Receiver display or light indicate no RF signal; Transmitter and receiver power light is on | 1. Remove receiver away from metal objects<br>2. Check if barrier is between receiver and transmitter<br>3. See "Matching receiver and transmitter" |
| **Distortion or unwanted noise bursts** | Receiver display or light indicate RF signal | 1. Remove interference sources nearby<br>2. Change receiver and transmitter working frequency<br>3. Replace transmitter batteries<br>4. If using many sets together, increase working frequency interval of systems<br>5. Maximize the volume button |
| **Failed to turn ON transmitter** | Press power button, transmitter not working, or shut down after a second | 1. Replace batteries<br>2. Re-press power button after few seconds |

## DESKTOP WIRELESS MICROPHONE SYSTEM

*PDWM1950*

*PDWM1958B*

*PDWM2850*

*PDWM2880B*

*PDWM1980*

*PDWM1988B*

*PDWM2950*

*PDWM2958B*

## SPECIFICATION

**Some specification may not apply to some models.**

### RECEIVER

**Channels** ---------- 16 Channels
**SNR** ---------- 96db
**Sensitivity** ---------- 96dbm
**Frequency Response** ---------- 30~20kHz
**Channel Interval** ---------- 500kHz
**Output Impedance** ---------- 600 Ohm
**Power Supply** ---------- 5V
**Power Consumption** ---------- <85Ma
**LED Display**

### HANDHELD TRANSMITTER

**Power Output** ---------- 10dbm
**Frequency Response** ---------- 30kHz~20kHz
**Power Supply** ---------- 3v (Normal battery)
**Power Supply** ---------- 3.7V (Lithium battery)

### BODYPACK TRANSMITTER

**Power Output** ---------- 10dbm
**Frequency Response** ---------- 30kHz~20kHz
**Power Supply** ---------- 3v