PYLE®

www.PyleAudio.com

USER MANUAL

PLCMTR74

Commercial Grade Safety Camera & Video System

Please read instructions carefully before installation and use. Installation should be performed by a professional installer.

To ensure your safety, the driver should not watch videos or operate features on the monitor while driving. There are no serviceable parts in this unit, do not disassemble or try to repair this unit. If the unit malfunctions please return to your vendor or send to a Pyle repair facility. Please observe and obey the local laws and regulations when installing the unit. Upon Installation, please make sure as to not to interfere with any of the vehicle's safety features, wiring, components, etc. We are not responsible for any damages, injury, malfunctions or otherwise noted due to faulty or non-professional installation.

Connection

Connect the camera's threaded locking 4-pin cable connectors into the female receiving connection of the included 4-pin extension cables. The extension cables then connect to your compatible video monitors with 4-pin receiving connectors. The threaded locking cable connectors of the camera serve to provide power and video for all cameras.
(camera 1 - channel 1, camera 2 - channel 2, camera 3 - channel 3, camera 4 - channel 4)

Please remember to disconnect your vehicle's battery prior to any connection / installation. Use the included wiring harness to provide power and video signals to your monitor. There are colored wires to assist in the video camera system setup.
See the wiring diagram for connections between cameras, monitor and your vehicle

When turning the vehicle's ignition key or turning to the accessory or ON position, power is supplied to the camera system through the control box and the monitor will be in stand-by mode.

Versatile Mounting Installation

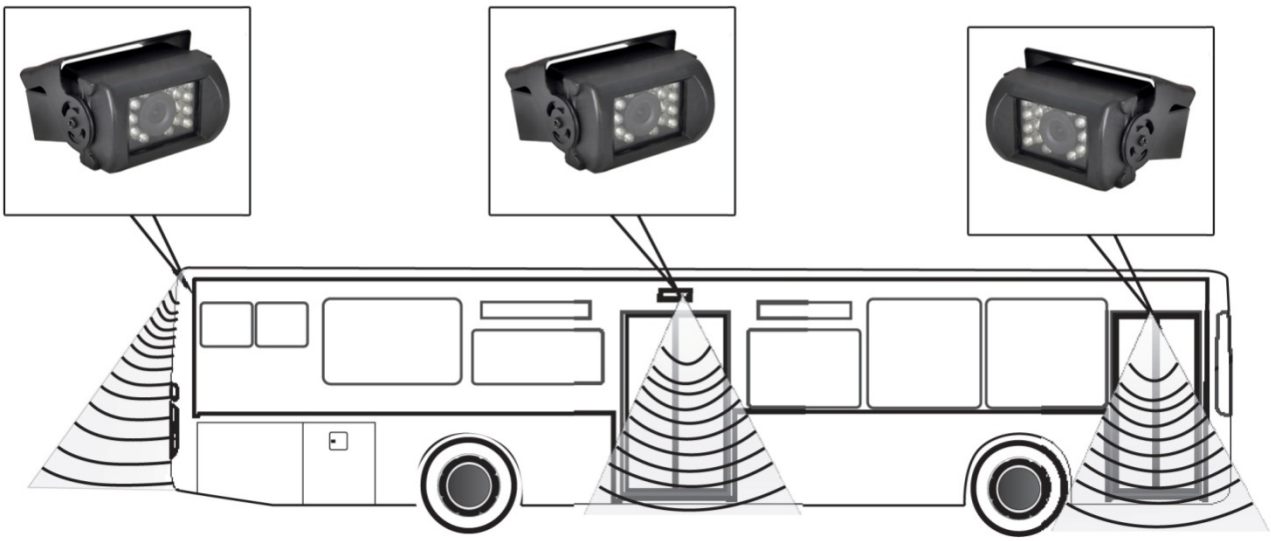

Wiring & Connection

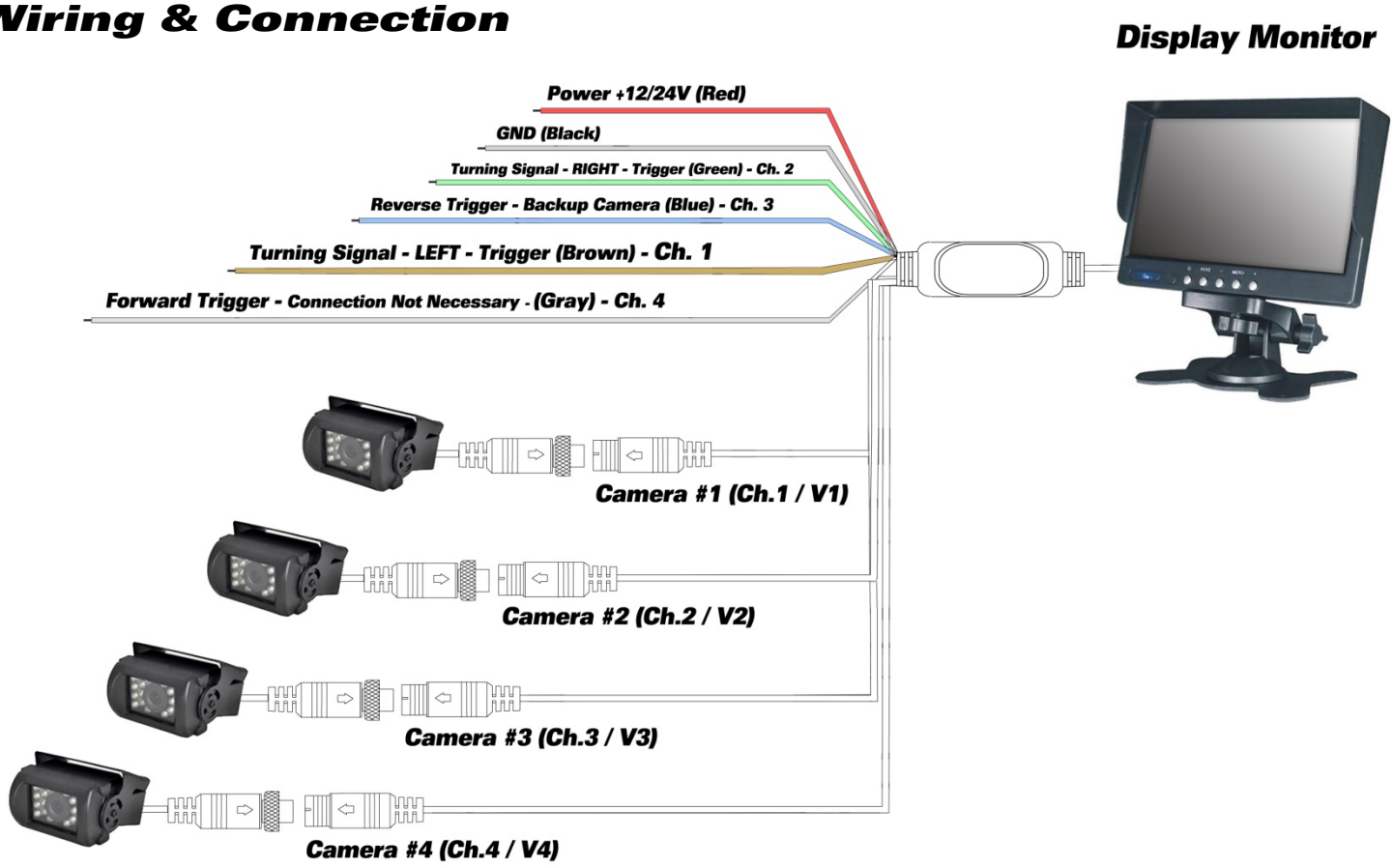

Red: Power 12/24V

Black: GND

Green: Turning Signal - Right Trigger

Blue: Reverse Trigger - Backup Cam

Gray: Forward Trigger

Brown: Turning Signal - Left - Trigger

*When the **Blue - Reverse Trigger -** is connected, the system will automatically revert to this connection once the vehicle is placed into reverse gear. (Channel 3)

*Please note: The monitor has a 'volume' function in the menu settings. This feature is not available for this model.

*The monitor controls allow the user to adjust picture settings horizontal or vertical based on the mounting location of the camera.

*The remote control can be used to configure the display monitor's brightness, color and tint.

**For additional information visit www.PyleAudio.com*

The video monitor is provided power and camera video signals via the video and power wiring harness. From the monitor, you will be able to control Ch. 1, Ch. 2, Ch.3 and Ch.4, input video cameras (V1, V2, V3, V4).

The monitor also features the ability to rotate the input camera image horizontally (Left / Right) and vertically (Up / Down) to accommodate for camera placement in the rear of the vehicle (Rear view camera compatibility) or where upside-down mounting is needed..

Monitor Controls

1	Power
2	Mode
3	Channel 1 - Camera 1
4	Channel 2 - Camera 2
5	Channel 3 - Camera 3
6	Channel 4 - Camera 4

*Please note, in cold weather and low temperatures, the display monitor may require some time to 'warm up' to clearly display a picture on the display.

Quad-View Control

Single Full View / Split Dual Video View / Quad Four Source View

The monitor button controls feature selectable viewing modes. The operator can choose to set to:

- Single full view (1 picture - from one camera input source)
- Split dual view (2 picture - from two camera input sources)
- Split quad four source view (4 picture - from four camera input sources)

Monitor Stand Mounting

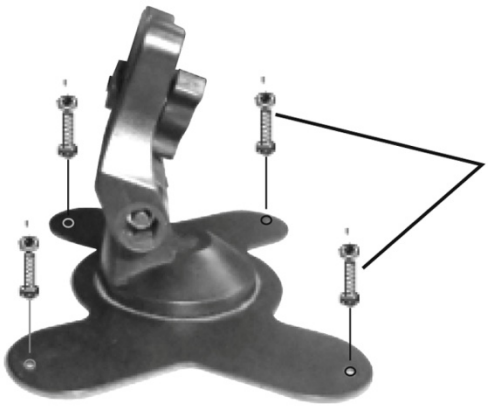

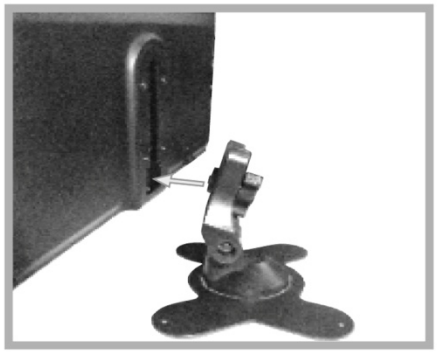

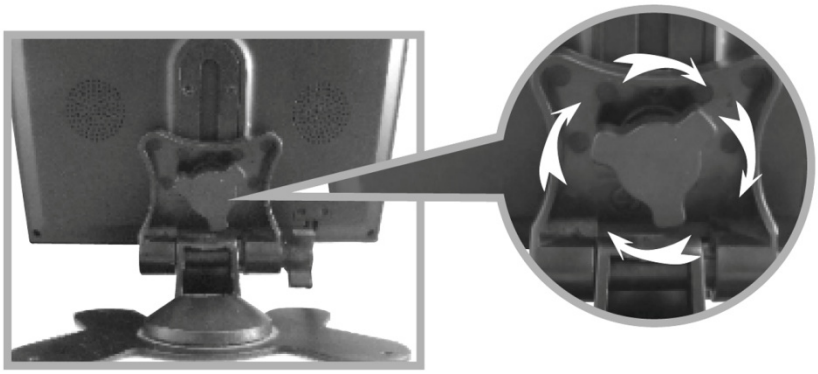

1. Set the mount stand in the desired location, then use screws to secure the mount stand into location. Please make sure as to set a location free from vehicle obstruction including any wiring, or location where it may obstruct the driver's view, driving conditions, etc.
2. Attach the metal buckle piece on top of the fan shaped mount stand, and slide it into the receiving slot in back of the display monitor assembly. This metal buckle should slide in and up to the monitor assembly.
3. Set the desired position/height of the buckle into the monitor assembly.
4. Tighten the clamp-style knob in the back of the stand mount to secure the monitor in the desired position.
5. The angle / tilt position of the stand mount is also adjustable. Located toward the base of the stand mount is another clamp-style knob.

*Be sure to mount the video monitor from speakers or other devices which may distort the output display. Keep the monitor away from the speaker's or other device's magnetic field.
*Install the monitor on a surface that can bear the capacity of over 9 lbs.
*Don't install the monitor in the line of ventilation areas (keep away from extreme hot and extreme cold temperatures).
*The monitor is not waterproof, avoid exposure to excess liquids or harsh cleaning chemicals/detergents.
*Holes in the back of the display monitor serve as ventilation ducts. To ensure operation of the unit, and protect from overheating, these holes must not be blocked, to reduce risk of electric shock or fire.

Model: PLCMTR74

Weatherproof Rearview Backup Camera & Monitor Video System, 7'' Display Screen, (4) Night Vision Cameras, Commercial Grade, Dual DC Voltage 12-24 for Bus, Truck, Trailer, Van

Multi-Camera & Monitor Video System
View All (4) Cameras On-Screen at the Same Time
Includes All Necessary Cables & Wiring

Video Display Viewing Modes:

Single Full View: 1 picture - from one camera input source
Split Dual View: 2 picture - from two camera input sources
Split Quad View: 4 picture - from four camera input sources

Monitor:

7'' TFT/LCD Active Matrix Video Monitor
Built-in Quad Control Box Screen Function
Supports Four Video Camera Inputs (V1/V2/V3/V4)
Aspect Ratio: 16:9 Widescreen Format
Selectable Viewing Modes: Single Full View / Split Dual Video View / Quad Four Source View
PAL/NTSC Video Format Compatible
Reverse Image (Backup Camera) Ability
High Resolution: 480 x 234
4-Pin Video Connectors
Universal Stand & Anti-Glare Sun Visor
Operating Temperature: -20 to +65
Power Requirement: DC 12-24V
Dimensions (W x H x D): 6.77'' x 4.53'' x 0.87''

Camera:

Includes (4) Mountable Cameras
Weatherproof Rearview Camera System
Marine Grade IP68 Rating
Image Sensor: Color CMD
System: PAL/NTSC Auto Switching
Video Output 1.0V pp-75 Ohm
Effective Pixels: 580 x 540
Resolution: 420 Lines
Lens Angle: 170 Degree
Min. Illumination: 0.2Lux
Auto Image Adjustment
18 LED IR Night Vision Illumination
Designed for Car/Truck use 12 & 24 Volt Systems
Camera Dimensions (W x H x D): 3.18'' x 2.95'' x 2.17'' - Each
Included (4) 4-Pin 50 Foot (15 Meter) Communication Cable x 4

If you are experiencing any problems with your camera and monitor system please contact support@pyleaudio.com.

Pyle Service Center
1600 63rd St.
Brooklyn, NY 11204
(718) 535-1844 ext. 279
www.pyleaudio.com