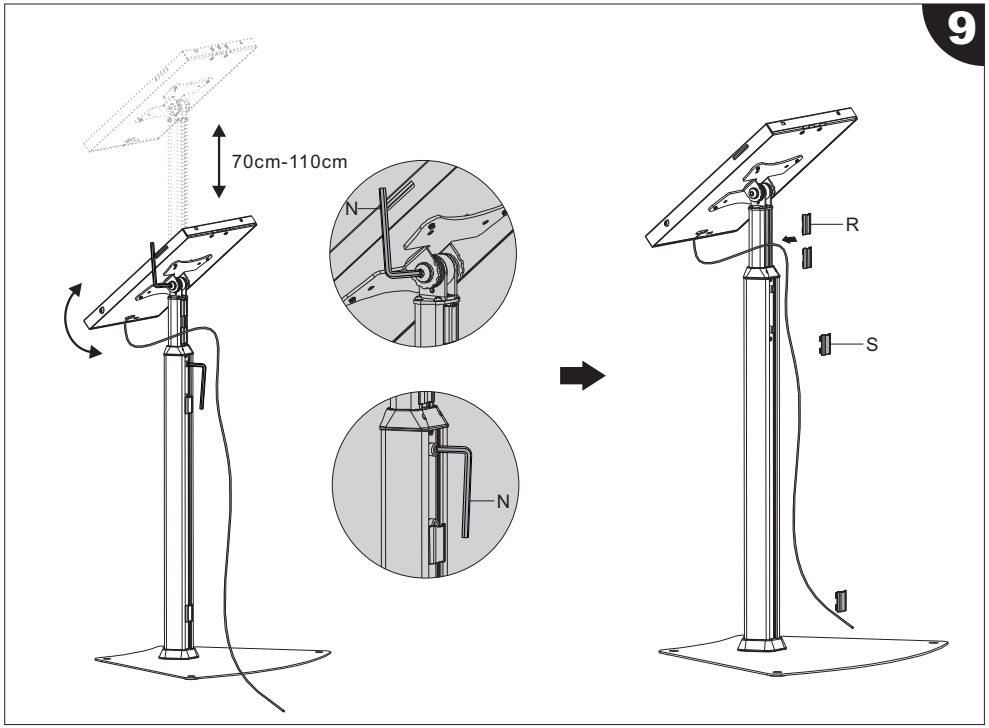

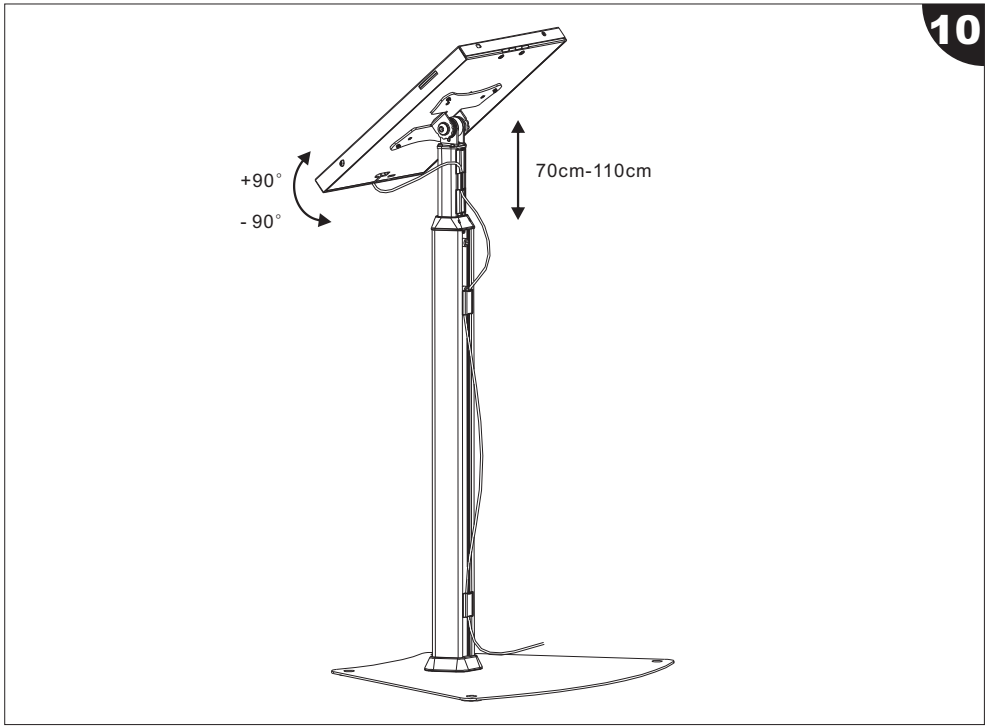

PYLE®

PyleUSA.com

Installation Instruction

PSPADLK55

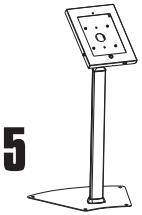

ITEM		DESCRIPTION/PART NO.	QUANTITY
A		pole	1
B		anti-theft box	1
C		base	1
D		plastic pad	1
E		silicone pad(A)	2
F		silicone pad(B)	2
G		silicone pad(C)	1
H		silicone pad(D)	1
I		silicone pad(E)	1
J		silicone pad(F)	1

ITEM		DESCRIPTION/PART NO.	QUANTITY
K		M6x16	4
L		ST5.5x38	4
M		Concrete anchor	4
N		Allen key	1
O		M5x8	4
P		Anti-theft screws	2
Q		anti-theft tool	1
R		cable clip	2
S		cable clip	2

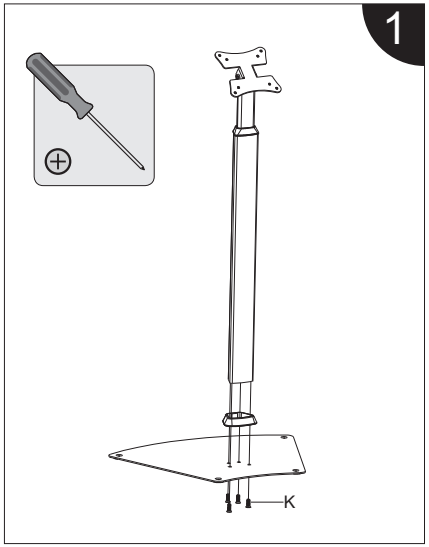

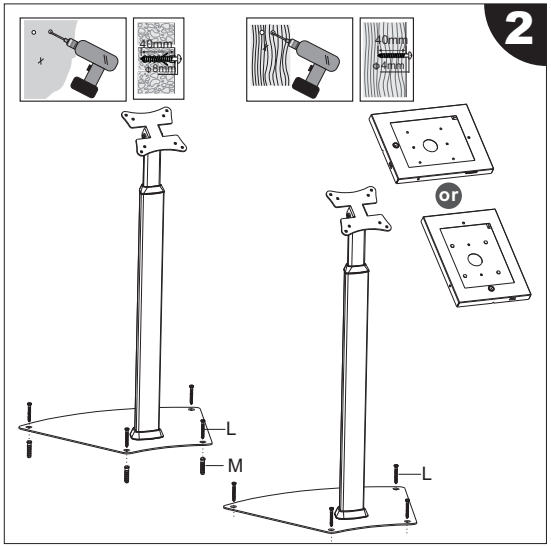

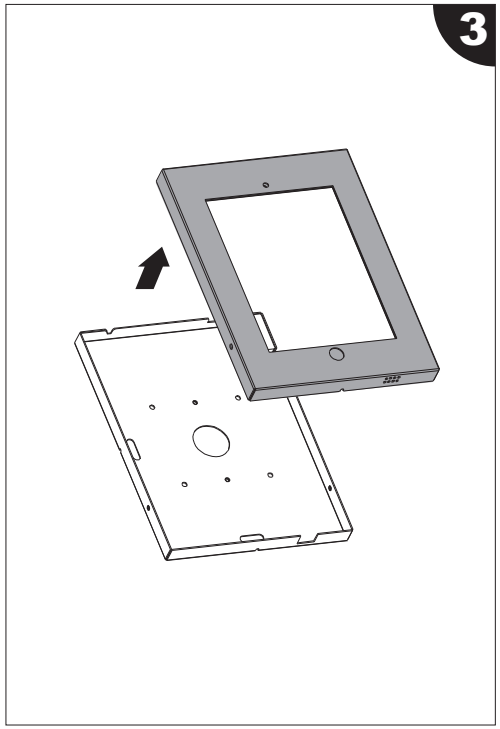
3

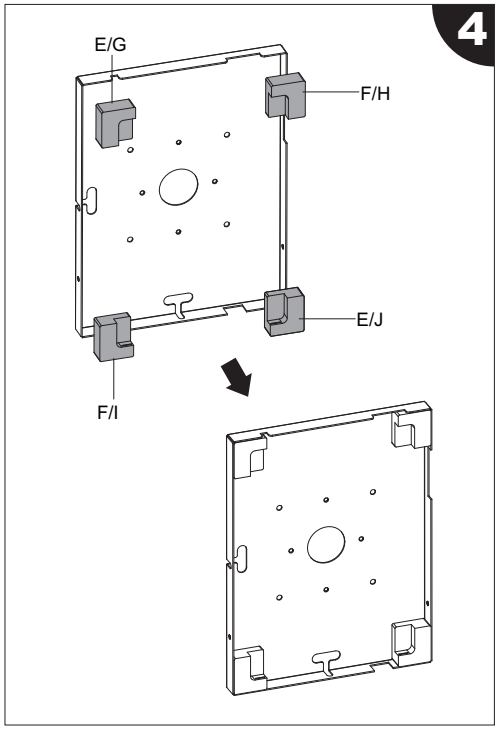
4
E/G
F/H
E/J
F/I

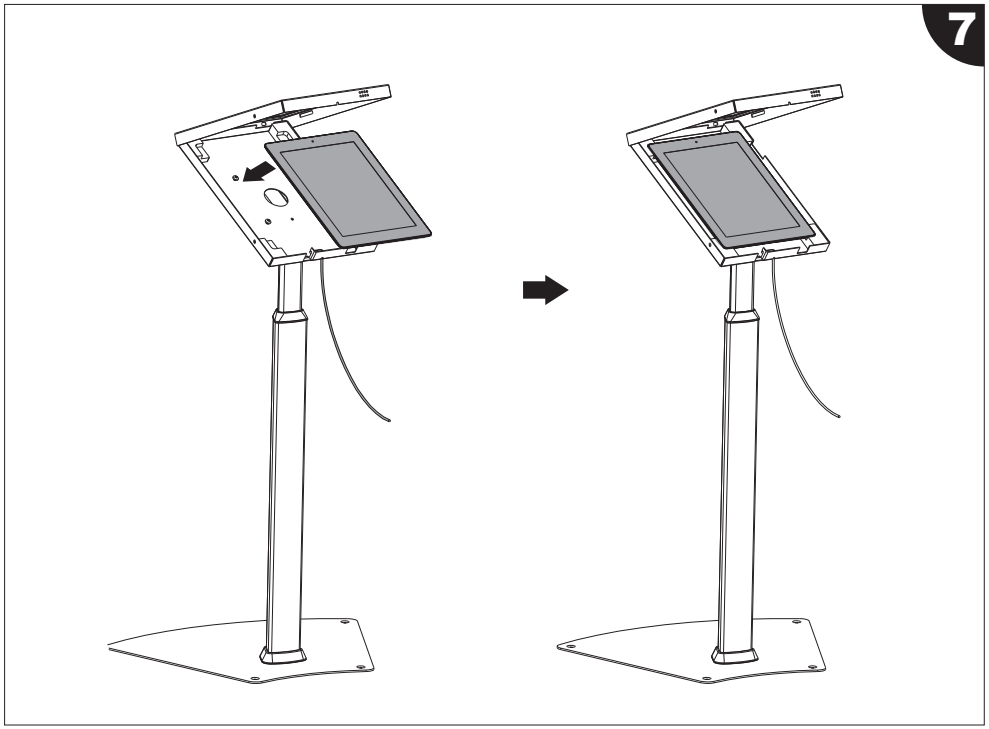
7

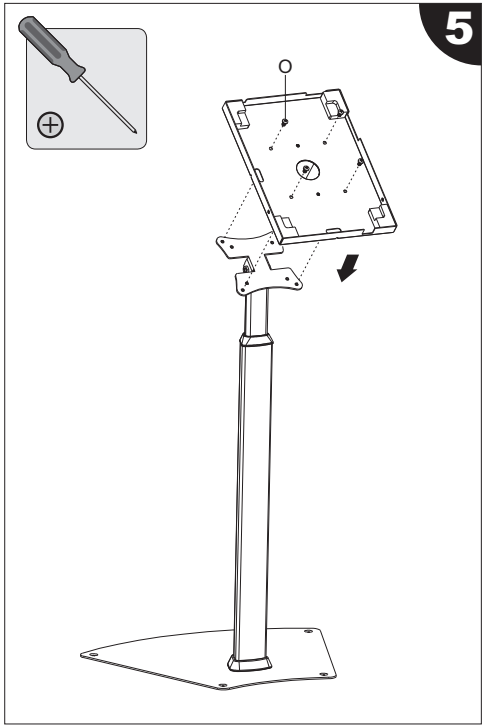
5
O

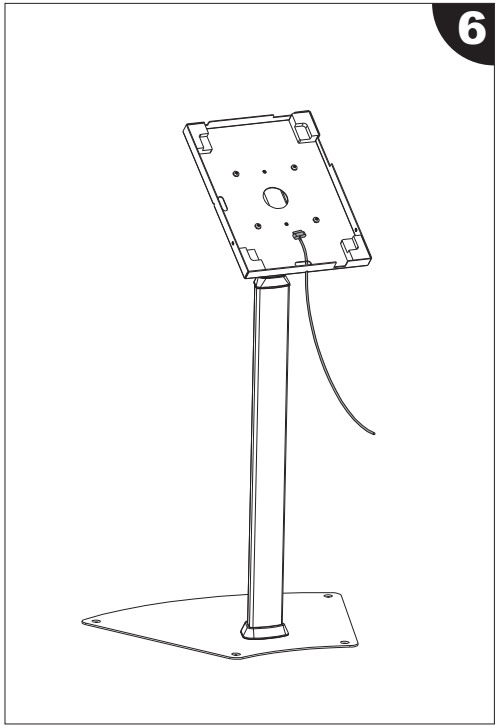
6

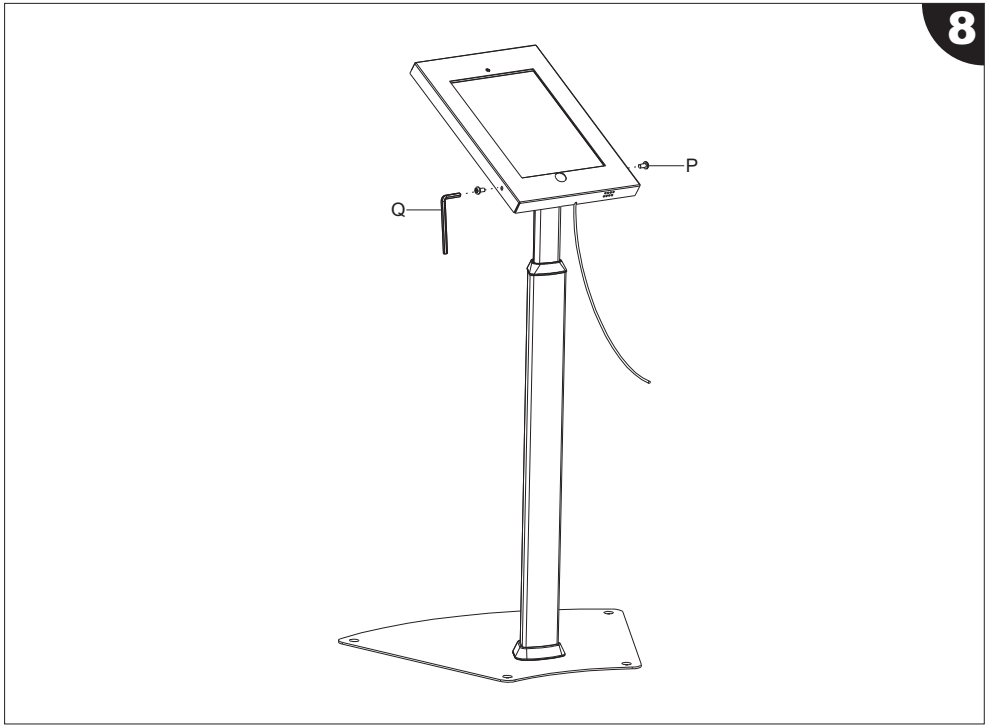
8
P
Q